QUICK START GUIDE

Audio Add-On Board

(Revision 1.0)

Doc. ID: QS-AMAUD1-1p0

Doc. Revision 1.0

October 2026

Legal Information and Disclaimers

AMBIQ MICRO BELIEVES THE INFORMATION IN THIS DOCUMENT IS ACCURATE AT THE TIME OF PUBLICATION. HOWEVER, THE INFORMATION MAY CONTAIN TECHNICAL INACCURACIES OR TYPOGRAPHICAL ERRORS. AMBIQ MICRO RESERVES THE RIGHT TO MAKE CORRECTIONS, MODIFICATIONS, ENHANCEMENTS, IMPROVEMENTS, OR OTHER CHANGES TO ITS PRODUCTS (AND DOCUMENTATION) AT ANY TIME WITHOUT NOTICE.

INFORMATION IN THIS DOCUMENT IS PROVIDED SOLELY TO ENABLE THE USE OF AMBIQ MICRO PRODUCTS AND IS PROVIDED “AS IS.” NO LICENSE IS GRANTED TO DESIGN OR FABRICATE ANY INTEGRATED CIRCUITS BASED ON THE INFORMATION IN THIS DOCUMENT. THIS DOCUMENT MAY NOT BE USED IN CONNECTION WITH ANY LEGAL ANALYSIS CONCERNING THE AMBIQ MICRO PRODUCTS DESCRIBED HEREIN. AMBIQ MICRO DISCLAIMS ALL WARRANTIES, EXPRESS OR IMPLIED, INCLUDING WITHOUT LIMITATION WARRANTIES OF MERCHANTABILITY, FITNESS FOR A PARTICULAR PURPOSE, TITLE, AND NON-INFRINGEMENT.

AMBIQ MICRO PRODUCTS ARE SOLD SUBJECT TO AMBIQ MICRO’S TERMS AND CONDITIONS OF SALE; SOFTWARE IS PROVIDED PURSUANT TO APPLICABLE LICENSE TERMS. NO LICENSE, EXPRESS OR IMPLIED, BY ESTOPPEL OR OTHERWISE, IS GRANTED UNDER ANY INTELLECTUAL PROPERTY RIGHT OF AMBIQ MICRO OR ANY THIRD PARTY BY THIS DOCUMENT.

CUSTOMERS ARE SOLELY RESPONSIBLE FOR THE DESIGN, VALIDATION, TESTING, AND SECURITY OF THEIR PRODUCTS AND APPLICATIONS, INCLUDING THE SPECIFIC MANNER IN WHICH AMBIQ MICROS PRODUCTS ARE INCORPORATED. “TYPICAL” PARAMETERS ARE FOR REFERENCE ONLY AND IT IS THE CUSTOMER’S RESPONSIBILITY TO VALIDATE “TYPICAL” SPECIFICATIONS FOR THEIR APPLICATION.

AMBIQ MICRO PRODUCTS ARE NOT DESIGNED OR AUTHORIZED FOR USE IN APPLICATIONS WHERE PRODUCT FAILURE COULD RESULT IN PERSONAL INJURY, DEATH, OR SEVERE PROPERTY OR ENVIRONMENTAL DAMAGE (“HIGH-RISK APPLICATIONS”) WITHOUT EXPRESS WRITTEN APPROVAL. IF PRODUCTS ARE USED IN HIGH-RISK APPLICATIONS WITHOUT SUCH APPROVAL, THE CUSTOMER SHALL INDEMNIFY AND HOLD HARMLESS AMBIQ MICRO AND ITS AFFILIATES FROM ALL RESULTING CLAIMS, DAMAGES, COSTS, AND EXPENSES, INCLUDING REASONABLE ATTORNEYS’ FEES. IN NO EVENT SHALL AMBIQ MICRO BE LIABLE FOR ANY INDIRECT, INCIDENTAL, SPECIAL, CONSEQUENTIAL, OR PUNITIVE DAMAGES, INCLUDING LOST PROFITS OR DATA, ARISING FROM THE USE OF THIS DOCUMENT OR ANY PRODUCT.

“AMBIQ”, “APOLLO”, “SPOT”, AND COMBINATIONS THEREOF ARE TRADEMARKS OF AMBIQ MICRO, INC. OTHER PRODUCT NAMES USED IN THIS PUBLICATION ARE FOR IDENTIFICATION PURPOSES ONLY AND MAY BE TRADEMARKS OF THEIR RESPECTIVE COMPANIES.

© 2026 Ambiq Micro, Inc.
All rights reserved.

Table of Contents

1. Introduction **6**
2. Document Revision History **7**
3. Reference Documents and Software **8**
4. Quick Start Guide **9**
5. Board Layout **10**
5.1 Board Top View 10
5.2 Board Bottom View 11
5.3 Major Components View 12
5.4 Top Side Components View 13
5.5 Bottom Side Components View 14
6. Hardware Configuration **15**
6.1 EVB Configuration 15
6.2 Master Clock Configuration 16
6.3 I2S Configuration 16
6.4 I2C Configuration 17
7. Audio Interfaces **19**
7.1 I2S Microphones 19
7.2 Analog Audio Input 19
7.2.1 Analog MEMS Microphones 20
7.2.2 Stereo Input 20
7.3 Analog Audio Output 20
7.3.1 Stereo Output 21
7.3.2 Mono Output 21
8. Power Supply Options and Measuring Current **23**
9. Demo Examples **24**
9.1 Hardware Requirements 24
9.1.1 Common Components 24
9.1.2 Connector Reference 24
9.1.3 cm4_btdm Controller Binary 25
9.1.4 Supported Audio Examples Summary 25
9.1.5 Build and Flash 25
9.1.6 Paired Demo Quick Reference 26
9.1.7 Troubleshooting 26
10. Ordering Information **27**

© 2026 Ambiq Micro, Inc.
All rights reserved.

List of Figures

Figure 1: Audio Add-On Board Plugged Into an EVB..... 9
Figure 2: Board Top View.....10
Figure 3: Board Bottom View..... 11
Figure 4: Board Major Components View..... 12
Figure 5: Board Top Side Components.....13
Figure 6: Board Bottom Side Components.....14
Figure 7: Resistors Used to Configure the Add-On Board for the Desired EVB.....15
Figure 8: Master Clock Configuration Header..... 16
Figure 9: I2S Configuration Headers.....17
Figure 10: I2C Configuration Headers.....18
Figure 11: Codec I2C Address..... 18
Figure 12: I2S Microphones.....19
Figure 13: Analog MEMS Microphones.....20
Figure 14: Analog Stereo Input..... 20
Figure 15: Analog Stereo Output.....21
Figure 16: Analog Mono Differential Output - J16.....21
Figure 17: Analog Mono Differential Output - J19.....22
Figure 18: Codec Power Supply Header.....23

© 2026 Ambiq Micro, Inc.
All rights reserved.

List of Tables

Table 1: Revision History....7
Table 2: Resistor Population Options....15
Table 3: Master Clock Configuration....16
Table 4: I2S Configuration....17
Table 5: Audio Add-On Board Connector References....24
Table 6: Supported Audio Examples Summary....25
Table 7: Paired Demo Quick Reference....26
Table 8: Ordering Information....27

© 2026 Ambiq Micro, Inc.
All rights reserved.

1. Introduction

This document provides instructions for setting up the Ambiq Audio Add-On Board, part number AMAUD1, to be used with supported Ambiq evaluation boards (EVBs). It describes the board's hardware configuration, audio interfaces, power supply options, and supported AmbiqSuite SDK demo examples.

The Audio Add-On Board has the following features:

- **Audio Processing**
  - Low-power codec with audio processor (U1 - ADAU1777BCBZRL)
- **Audio Inputs**
  - Two I2S microphones for left and right channels (MK1 and MK2 - MMICT5848-00-012)
  - Two analog MEMS microphones (MK1 and MK2 - MMICT5848-00-012)
  - Stereo analog input audio jack (J17 - SJ-435107)
- **Audio Outputs**
  - Stereo analog output audio jack (J14 - SJ-435107)
  - Two mono differential output terminal blocks for the left and right channels (J16 and J19 - 282837-2)
- **Clocking and Configuration**
  - On-board 24.576 MHz CMOS oscillator (Y1 - ASCO2-24.576MHZ-EK-T3)
  - Master clock source configuration header (J9)
  - SMA connector for an external clock source (J11)
  - Codec I2S selection headers (J2-J5)
  - I2C configuration headers (J10 and J20)
- **EVB Connectivity**
  - High-speed connector for interfacing with supported EVBs (J8 - QTH-060-02-X-D-A)
- **Power Measurement**
  - Power measurement headers (J7, J12, and J13)
- **Compliance**
  - RoHS compliant

CAUTION

Components are mounted on the back of the board. Handle the board carefully to avoid damaging these components.

© 2026 Ambiq Micro, Inc.
All rights reserved.

2. Document Revision History

Table 1: Revision History

Revision	Date	Description
1.0	September 2026	Initial NDA release

© 2026 Ambiq Micro, Inc.
All rights reserved.

3. Reference Documents and Software

The latest versions of the following reference documents and software are available from the Ambiq Content Portal.

- Ambiq Audio Add-On Board schematic
- Apollo510D Lite Series EVB schematic
- Apollo330M Plus Series EVB schematic
- Apollo510B EVB schematic
- AmbiqSuite SDK

© 2026 Ambiq Micro, Inc.
All rights reserved.

4. Quick Start Guide

The Audio Add-On Board Kit comes with the following items:

- Audio Add-On Board (AMAUD1), revision 1.0
- Extra jumpers

The AMAUD1 comes with jumpers pre-configured for default operation. To power on the board and program execution, plug in the Audio Add-On board to the High-Speed Connector on a supported EVB (as shown below), connect the USB-C cable from a USB port on a PC to the J-Link USB connector on the EVB, and turn on the power switch on the EVB. The green LED next to the power switch should be illuminated. This powers on both the EVB and the Audio Add-On Board.

The following image below shows an example of the AMAUD1 board connected to the J7 high-speed header on the Apollo510D Lite EVB. When setting up the AMAUD1, refer to the Quick Start Guide for the selected EVB. Connector part numbers may vary by platform.

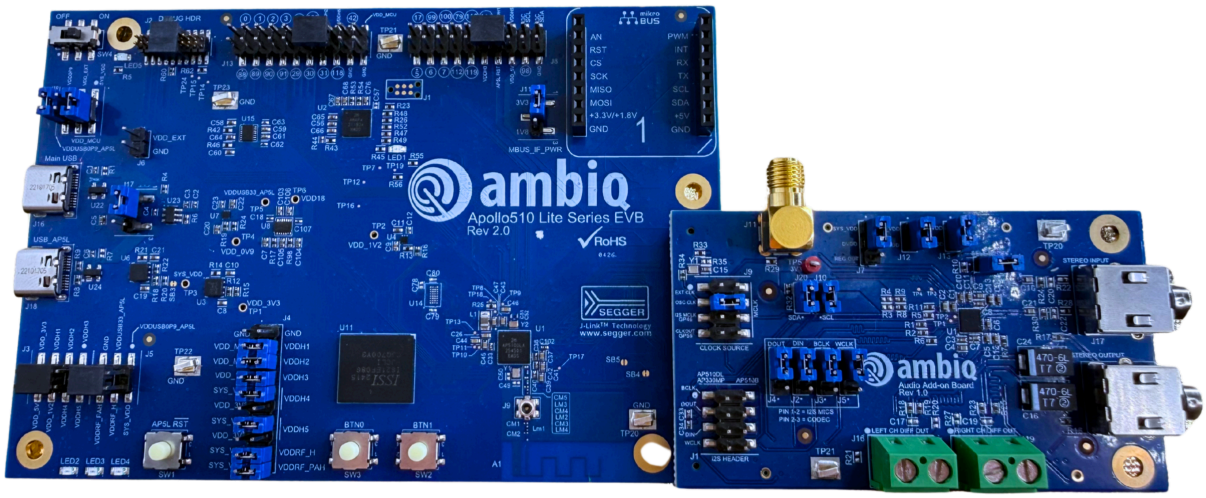

Figure 1: Audio Add-On Board Plugged Into an EVB

The AmbiqSuite SDK provides several example programs that can be used with the Add-On Board. Download the SDK from the Ambiq Content Portal and select the appropriate pre-built examples for the target EVB.

The supported EVBs are:

- Apollo510D Lite Series EVB (AP510DL EVB)
- Apollo330M Plus Series EVB (AP330MP EVB)
- Apollo510B EVB (AP510B EVB)[1]

[1] Pre-built SDK examples are not available for this EVB.

© 2026 Ambiq Micro, Inc.
All rights reserved.

5. Board Layout

This section provides top, bottom, and component location views of the Audio Add-On Board.

5.1 Board Top View

The following figure shows the top view of the AMAUD1.

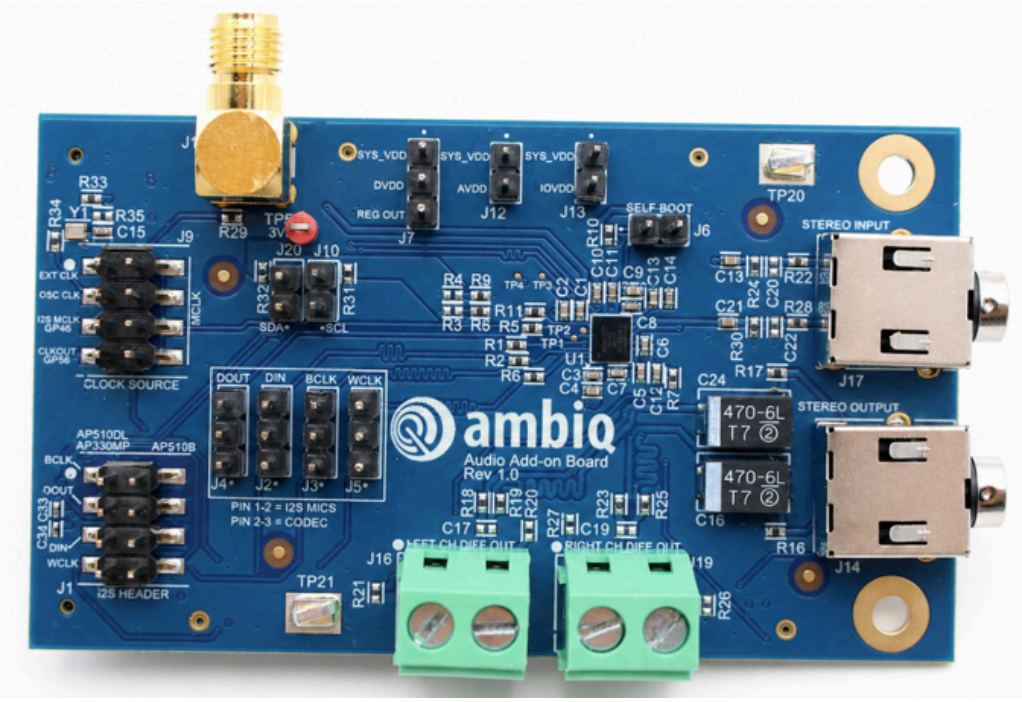

Figure 2: Board Top View

© 2026 Ambiq Micro, Inc.
All rights reserved.

5.2 Board Bottom View

The following figure shows the bottom view of the AMAUD1.

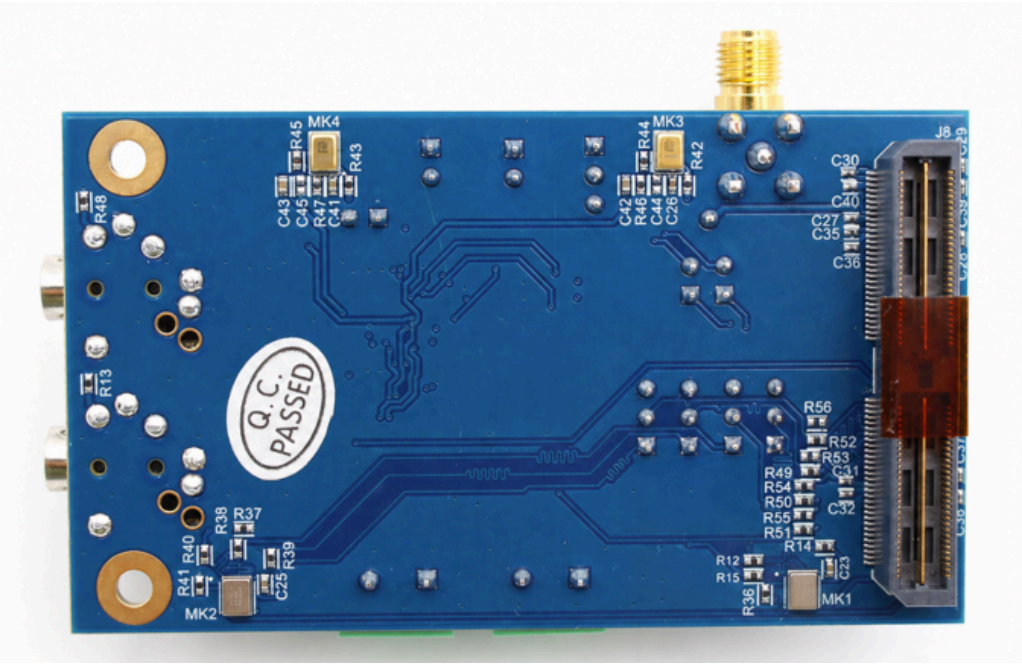

Figure 3: Board Bottom View

© 2026 Ambiq Micro, Inc.
All rights reserved.

5.3 Major Components View

The following figure shows the major components of the AMAUD1.

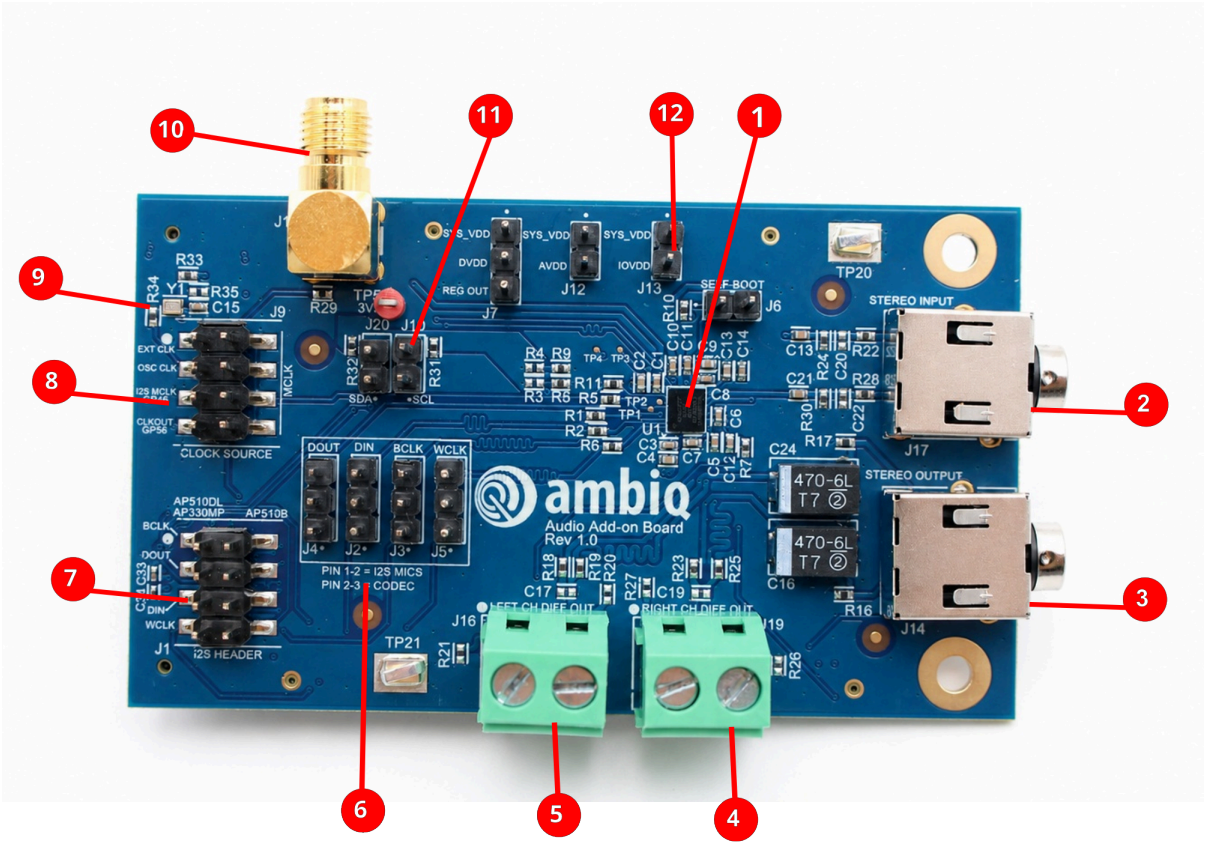

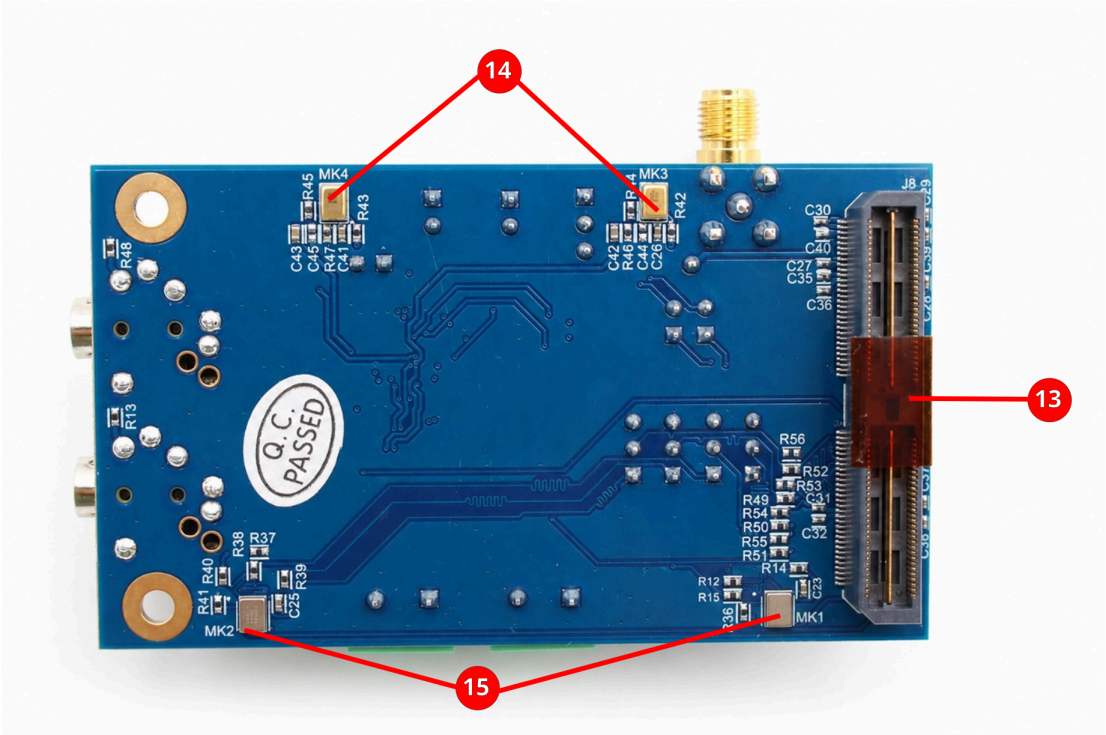

Figure 4: Board Major Components View

© 2026 Ambiq Micro, Inc.
All rights reserved.

Major components:

1. Audio Codec
2. Stereo Input Audio Jack
3. Stereo Output Audio Jack
4. Mono Right Channel Differential Output Connector
5. Mono Left Channel Differential Output Connector
6. I2S Configuration Headers
7. I2S Visibility Header
8. Master Clock Configuration Header
9. 24.576 MHz CMOS Oscillator
10. External Clock SMA Connector
11. I2C Headers
12. Power Configuration / Current Measurement Headers
13. High Speed Header
14. Analog MEMS Microphones (x2)
15. I2S Microphones (x2)

5.4 Top Side Components View

The following figure shows the top side components of the AMAUD1.

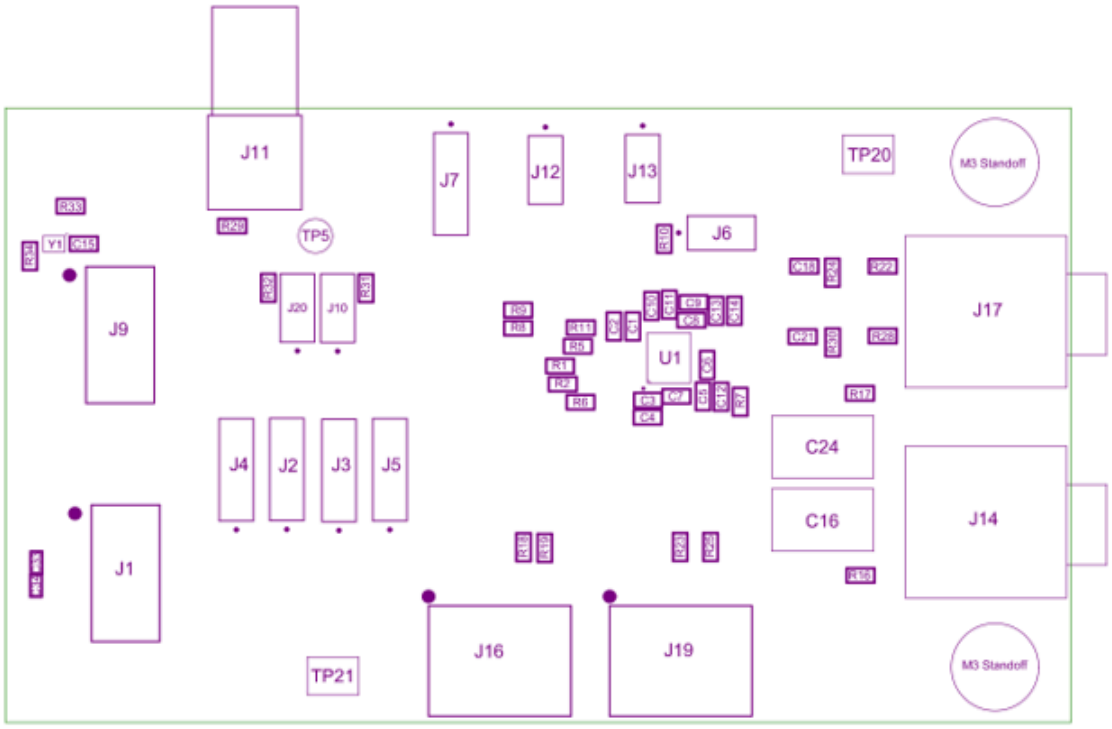

Figure 5: Board Top Side Components

© 2026 Ambiq Micro, Inc.
All rights reserved.

5.5 Bottom Side Components View

The following figure shows the bottom side components of the AMAUD1.

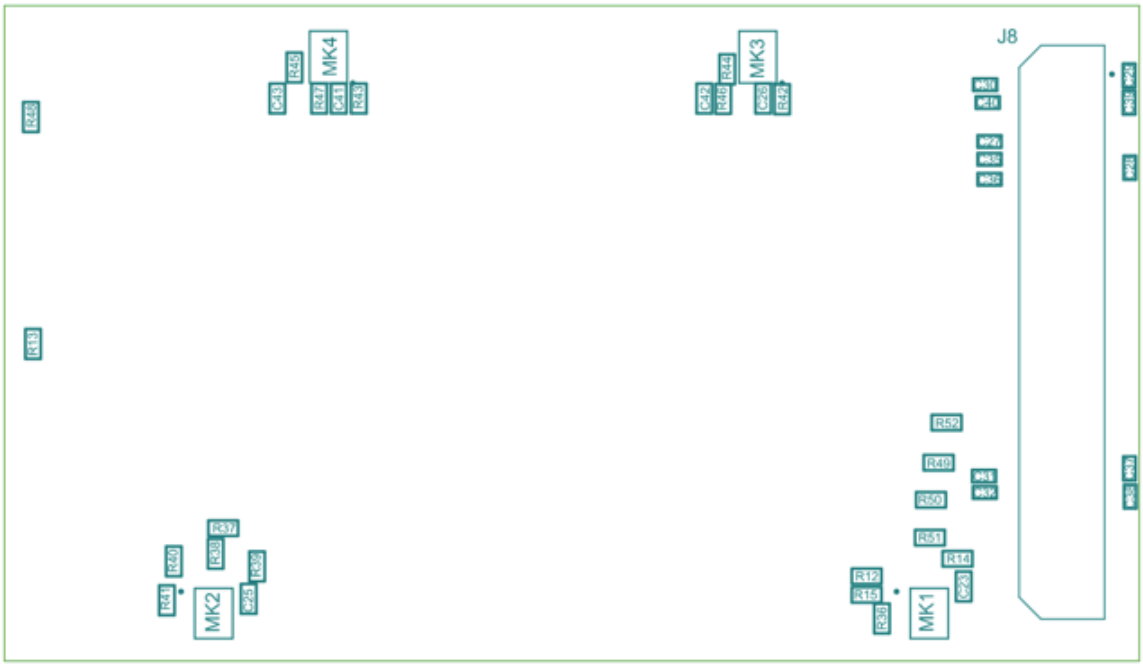

Figure 6: Board Bottom Side Components

© 2026 Ambiq Micro, Inc.
All rights reserved.

6. Hardware Configuration

This section provides an overview of the Audio Add-On Board Hardware Configuration using resistor population and jumpers.

6.1 EVB Configuration

The Audio Add-On Board can be used with Apollo510D Lite series EVB, Apollo330M Plus Series EVB, or Apollo510B EVB, depending on the resistor configuration on the board.

By default, the Audio Add-On Board is configured for use with the Apollo510D Lite and Apollo330M Plus EVBs; no hardware modifications are required for these boards. To configure the board for use with the Apollo510 EVB, depopulate resistors R49–R52 and populate R53–R56 with 0 Ω resistors in 0603 packages. These resistors are on the bottom side of the board.

Table 2: Resistor Population Options

Resistor	Apollo330MP / Apollo510DL EVB	Apollo510B EVB
R49	Populated	De-populated
R50	Populated	De-populated
R51	Populated	De-populated
R52	Populated	De-populated
R53	De-populated	Populated
R54	De-populated	Populated
R55	De-populated	Populated
R56	De-populated	Populated

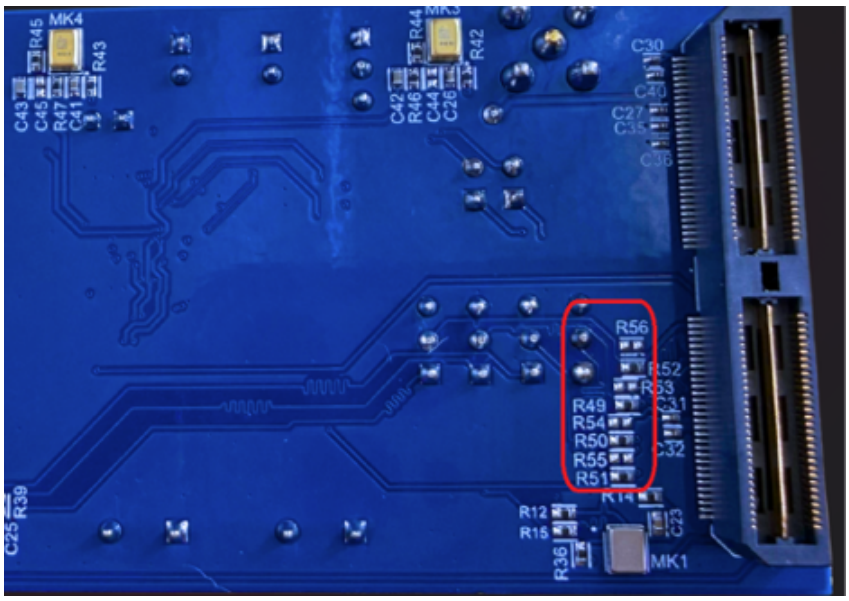

Figure 7: Resistors Used to Configure the Add-On Board for the Desired EVB

© 2026 Ambiq Micro, Inc.
All rights reserved.

6.2 Master Clock Configuration

This section describes the master clock configuration options for the audio codec. Connector J9 selects the master clock source for the audio codec. Place the jumper across the pins corresponding to the desired master clock source. Configuration Options 3 and 4 are not applicable to the Apollo510B EVB.

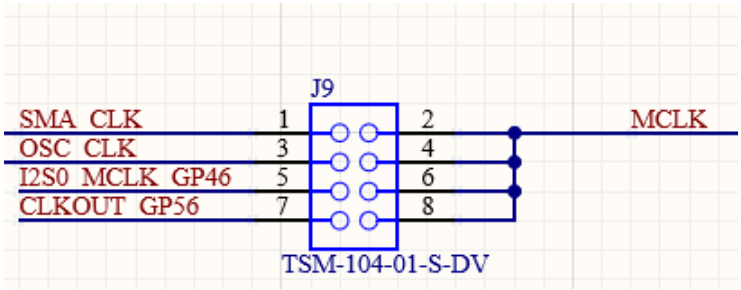

Figure 8: Master Clock Configuration Header

The default configuration uses the on-board 24.576 MHz CMOS oscillator by placing the jumper across pins J9-3 and J9-4, as indicated by the bold row in the following table.

Table 3: Master Clock Configuration

Configuration Option	CODEC I2S Master Clock Source	From Header Pin	To Header Pin
1	SMA connector	J9-1	J9-2
2	**On-Board 24.576 MHz CMOS Oscillator**	**J9-3**	**J9-4**
3	GP46 I2S0 MCLK (only for AP330MP/AP510DL EVBs)	J9-5	J9-6
4	GP46 CLKOUT (only for AP330MP/AP510DL EVBs)	J9-7	J9-8

6.3 I2S Configuration

This section how to configure the I2S connection between the Audio Add-On Board and the EVB. The EVB I2S interface can be connected either to the board's I2S microphones or to the audio codec. To connect the board's I2S microphones to the EVB I2S signals, place the jumpers across pins 1-2 of J2-J5. To connect the audio codec to the EVB I2S signals, place the jumpers across pins 2-3 of J2-J5. When the I2S microphones are selected, the codec’s I2S interface is not used.

The default configuration connects the audio codec to the EVB by placing the jumpers across pins 2-3 of J2-J5, as indicated by the bold row in the following table.

© 2026 Ambiq Micro, Inc.
All rights reserved.

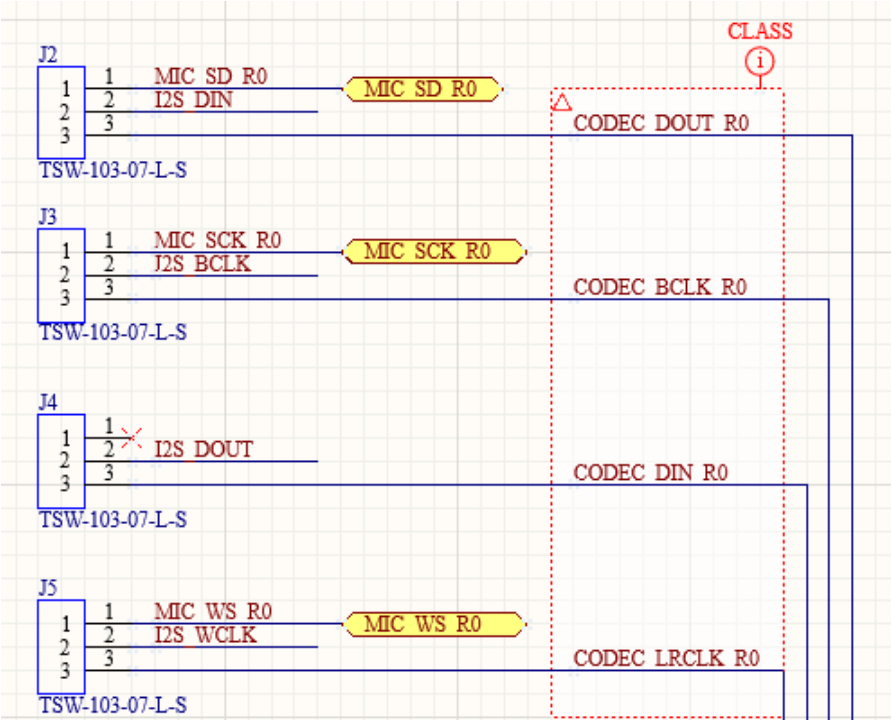

Figure 9: I2S Configuration Headers

Table 4: I2S Configuration

EVB I2S Source	From Header Pin (J2-J5)	To Header Pin (J2-J5)
I2S Microphones	1	2
Codec	**2**	**3**

6.4 I2C Configuration

This section describes the I2C connections on the Audio Add-On Board. To connect the EVB's I2C interface to the audio codec, place jumpers on J10 and J20 on the add-on board. To connect the I2C from the codec to another controller, remove both jumpers, connect a wire to pin 2 of J10 and J20 (SCL and

© 2026 Ambiq Micro, Inc.
All rights reserved.

SDA respectively) to your desired I2C controller. The codec reset is also connected to a GPIO on the EVB.

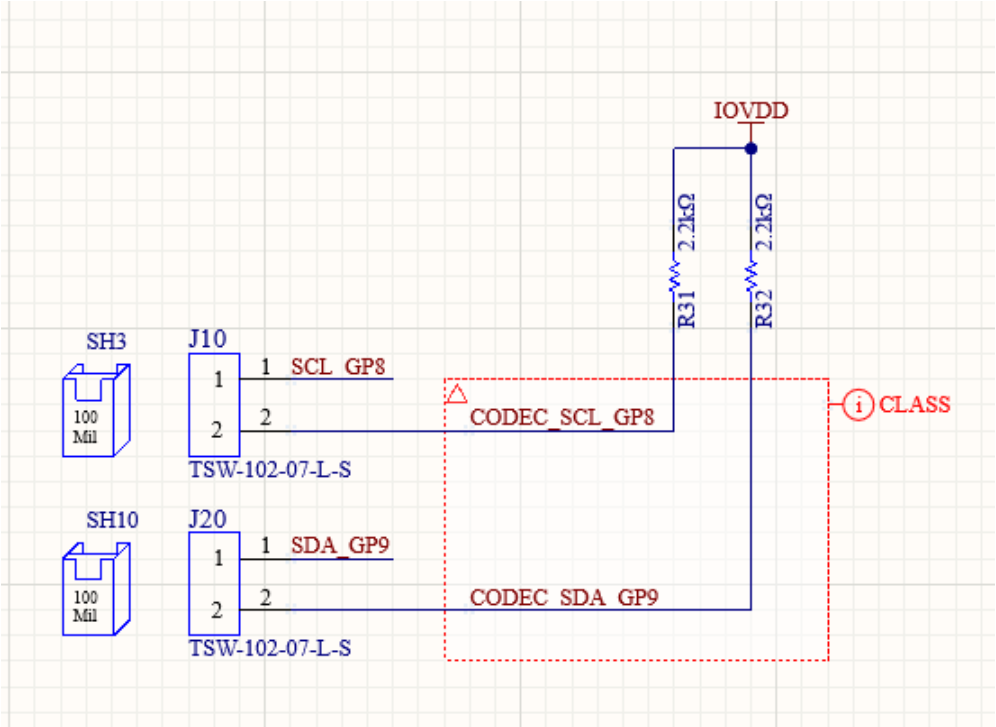

Figure 10: I2C Configuration Headers

The default address of the codec I2C is 0x3C, as shown below. The address can be changed if needed.

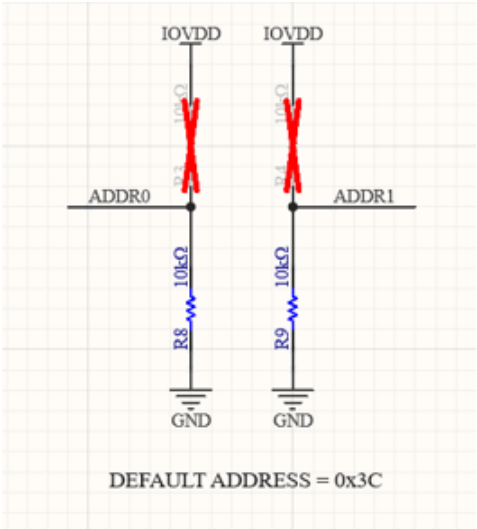

Figure 11: Codec I2C Address

© 2026 Ambiq Micro, Inc.
All rights reserved.

7. Audio Interfaces

This section describes the audio interfaces available on the Audio Add-On Board.

7.1 I2S Microphones

The Audio Add-On Board includes two I2S microphones that provide the left and right audio channels. Each microphone has THSEL and WAKE pins controlled by GPIOs on the EVB. The Microphone SD, SCK, and WS signals are connected to the I2S signals on the EVB based on the user selection. Refer to I2S Configuration for the I2S jumper settings.

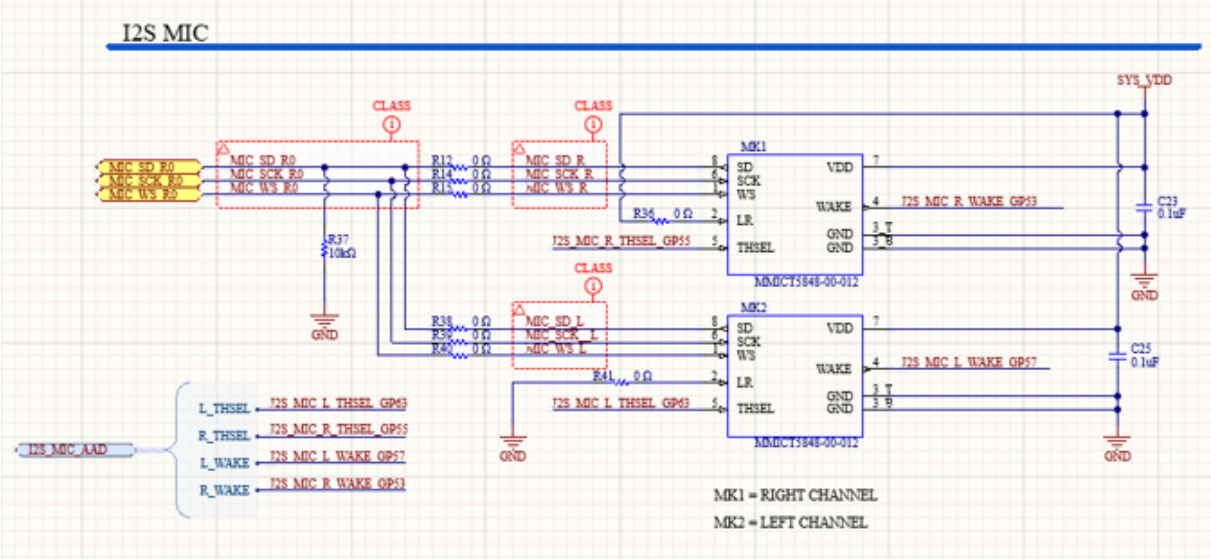

Figure 12: I2S Microphones

7.2 Analog Audio Input

This section describes the analog input interface to the audio codec on the Audio Add-On Board.

© 2026 Ambiq Micro, Inc.
All rights reserved.

7.2.1 Analog MEMS Microphones

The Audio Add-On Board includes two I2S analog MEMS microphones. Each microphone output is connected to the audio codec analog input (AIN2 and AIN3).

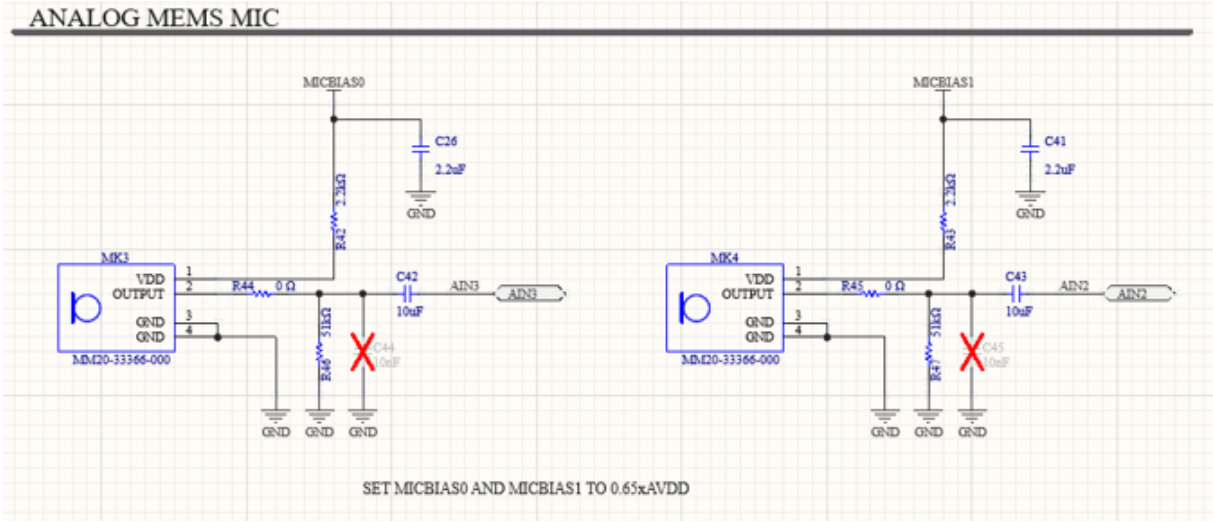

Figure 13: Analog MEMS Microphones

7.2.2 Stereo Input

The Audio Add-On Board includes a stereo analog audio input jack. The jack's left and right channel signals connect to the audio codec inputs AIN0 and AIN1, respectively.

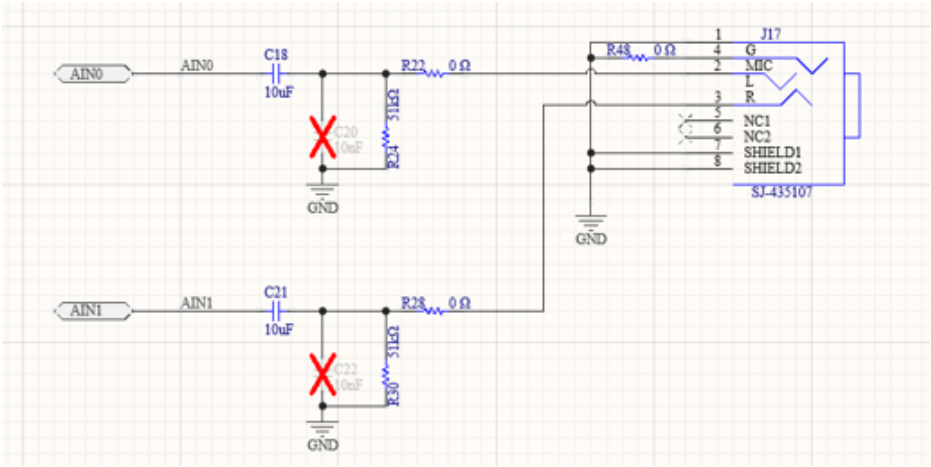

Figure 14: Analog Stereo Input

7.3 Analog Audio Output

This section describes the audio codec's analog output interface on the Audio Add-On Board.

© 2026 Ambiq Micro, Inc.
All rights reserved.

7.3.1 Stereo Output

The Audio Add-On Board includes a stereo analog output jack connected to the codec's LOUTL_P and LOUTR_P outputs. These are single-ended signals rather than a differential pair: LOUTL_P carries the left-channel output, and LOUTR_P carries the right-channel output.

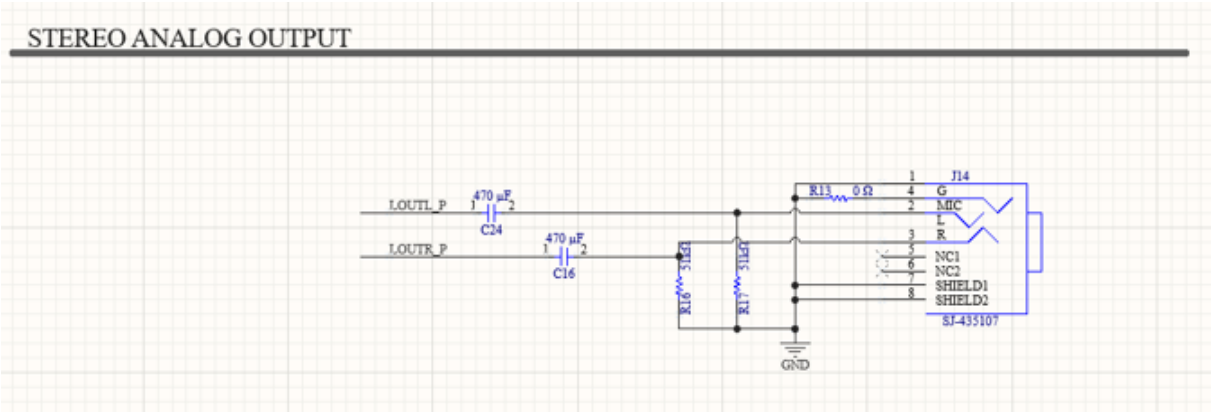

Figure 15: Analog Stereo Output

7.3.2 Mono Output

The Audio Add-On Board also includes two board-to-wire terminals for the codec's mono analog outputs. One terminal provides the differential left-channel LOUT output, and the other provides the differential right-channel LOUT output.

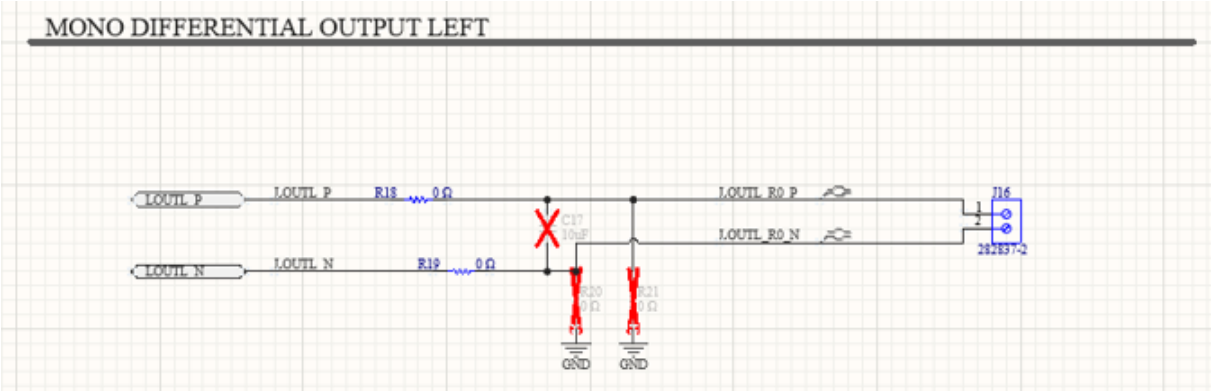

Figure 16: Analog Mono Differential Output - J16

© 2026 Ambiq Micro, Inc.
All rights reserved.

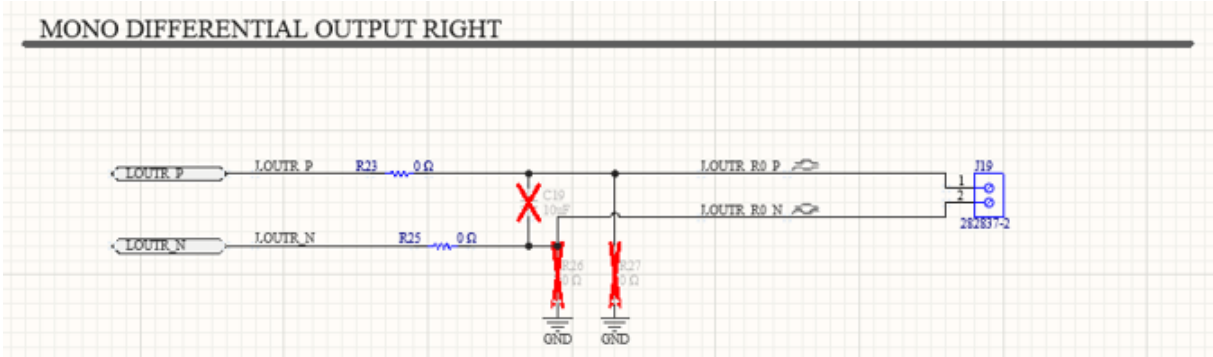

Figure 17: Analog Mono Differential Output - J19

© 2026 Ambiq Micro, Inc.
All rights reserved.

8. Power Supply Options and Measuring Current

The Audio Add-On Board is powered by rails generated on the connected EVB. There are no power supplies on the Audio Add-On Board.

The audio codec has three main power rails:

- **IOVDD**: Can be powered from SYS_VDD generated on the EVB (nominal 1.8V), jumper on J13
- **AVDD**: Can be powered from SYS_VDD generated on the EVB (nominal 1.8V), jumper on J12
- **DVDD**: Can be powered from SYS_VDD generated on the EVB (nominal 1.8V) or from the codec's internal power supply REG_OUT. By default, a jumper between pins 1-2 of J7 selects SYS_VDD. Place the jumper on pins 2-3 of J7 to select REG_OUT instead.

Headers J7, J12, and J13 can also be used to measure current on their corresponding power rails.

The codec's MICBIAS output is used to power the analog microphones on the Audio Add-On Board.

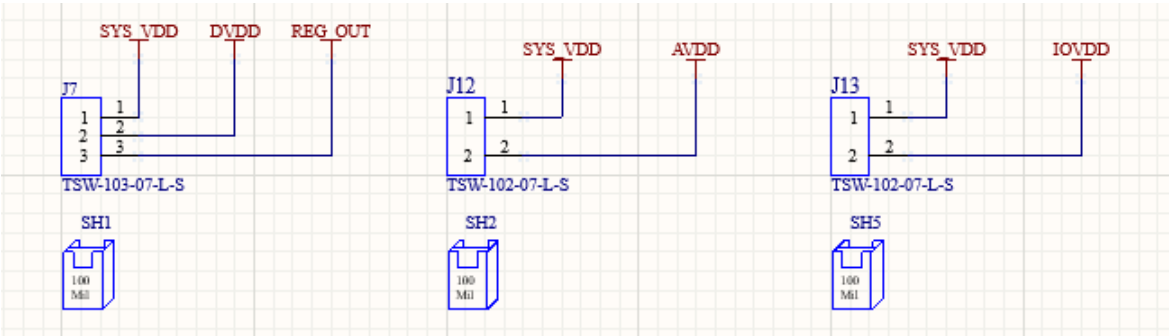

Figure 18: Codec Power Supply Header

© 2026 Ambiq Micro, Inc.
All rights reserved.

9. Demo Examples

This section describes the AmbiqSuite SDK examples that support the Audio Add-On Board when connected to the J7 high-speed header on the EVB. Using AmbiqSuiteC 5.2.0 as a reference, out-of-the-box support for the Audio Add-On Board is available only in the `bt_ceva` examples for the `apollo510dL_evb` and `apollo330mP_evb` platforms. The `apollo510b_evb` supports the Audio Add-On Board at the hardware level. However, AmbiqSuiteC 5.2.0 does not provide an out-of-the-box example for this platform.

The Audio Add-On Board includes an ADAU1777 audio codec that provides analog audio input and output and communicates with the EVB through the I2S0 interface.

The examples for the supported platforms are located in the following directory:

```
boards/<board>/examples/bt_ceva/<example_name>/
```

NOTE

The `bt_ceva` examples are available only in the Ceva-enabled AmbiqSuite SDK. They are not included in the standard AmbiqSuite SDK. The Ceva-enabled SDK is available from the Ambiq Content Portal under a package name such as `AmbiqSuiteC_x.y.0` (for example, `AmbiqSuiteC_5.2.0`).

9.1 Hardware Requirements

9.1.1 Common Components

- Apollo510dL EVB or Apollo330mP EVB
- Audio add-on board (ADAU1777 codec) – plugs into EVB J7 high-speed slot
- 3.5 mm stereo headset – plugs into add-on board J14 (for audio output demos)
- Ambiq TDK PDM microphone board – plugs into EVB J14/J15 slots (for mic-input demos)
- External audio source (e.g., smartphone, MP3 player) – plugs into add-on board J17 line-in (for line-in demos)
- Second EVB (for paired LE Audio demos)
- Smartphone with Bluetooth Classic and/or LE Audio support (for A2DP/HFP demos)
- Segger J-Link debugger and ITM/SWO for debug output (optional)

9.1.2 Connector Reference

Table 5: Audio Add-On Board Connector References

Connector	Location	Function
J7	EVB high-speed slot	Audio add-on board interface (I2S to ADAU1777)
J14	Audio add-on board	3.5 mm stereo headset output
J17	Audio add-on board	Stereo line-in (external audio source)
J14/J15	EVB	Ambiq TDK PDM microphone board
BTN0 / BTN1	EVB	Playback, volume, and call controls (selected examples)

© 2026 Ambiq Micro, Inc.
All rights reserved.

9.1.3 cm4_btdm Controller Binary

Bluetooth Classic examples (A2DP, HFP, BTDM) require the cm4_btdm controller binary for Bluetooth Dual Mode operation. Ensure this binary is flashed to the CM4 controller before running those demos.

9.1.4 Supported Audio Examples Summary

Table 6: Supported Audio Examples Summary

Example	Profile/Role	Audio Input	Audio Output	Pairing Partner
freertos_a2dp_sink	A2DP Sink	— (receive over BT)	Headset J14	Smartphone (A2DP Source)
freertos_hfp_hf	HFP Hands-Free	TDK PDM mic (J14/J15) or ADAU1777 analog mic [1]	Headset J14	Smartphone (HFP AG)
freertos_btdm_example	A2DP + HFP + BLE	TDK PDM mic (J14/J15) or ADAU1777 analog mic [1]	Headset J14	Smartphone (BT Classic + BLE)
freertos_broadcast_sink	LE Audio Broadcast Sink	— (receive over BLE)	Headset J14	broadcast_source board or smartphone
freertos_broadcast_source	LE Audio Broadcast Source	Line-in J17 (default) or TDK PDM mic [2]	— (transmit over BLE)	broadcast_sink board or smartphone
freertos_unicast_client	LE Audio Unicast Client (source)	Line-in J17 (default) or TDK PDM mic [2]	— (transmit over BLE)	unicast_server (AMBIQ_AUDIO)
freertos_unicast_server	LE Audio Unicast Server (sink)	— (receive over BLE)	Headset J14	unicast_client board
freertos_wireless_mic_dongle	BAP Unicast Client (dongle)	— (receive over BLE)	Headset J14	wireless_microphone (WIRELESS_MIC)
freertos_wireless_microphone	BAP Unicast Server (mic)	TDK PDM mic (J14/J15)	— (transmit over BLE)	wireless_mic_dongle (WIRELESS_MIC_DONGLE)

[1] Define ANALOG_MIC macro to use ADAU1777 onboard analog microphone instead of TDK PDM mic.

[2] Disable LINE_IN global macro to switch from line-in (J17) to TDK PDM microphone input.

9.1.5 Build and Flash

1. Open a terminal in the example directory, e.g.:

   ```
   boards/apollo510dL_evb/examples/bt_ceva/freertos_a2dp_sink/
   ```

2. Build using GCC:

   ```
   cd gcc && make
   ```

3. Flash the generated binary to the target EVB using Segger J-Link.
4. Optional: Define AM_DEBUG_PRINTF at project level to enable ITM/SWO debug messages at 1 MHz.
5. Note: Enabling debug printing prevents deep sleep (device stays in normal sleep).
6. Detailed operational guidance on each example is available under the readme of each example folder.

© 2026 Ambiq Micro, Inc.
All rights reserved.

9.1.6 Paired Demo Quick Reference

Table 7: Paired Demo Quick Reference

Demo Pair	Board 1 (Role)	Board 2 (Role)	What You Hear
LE Audio Broadcast	broadcast_source (input)	broadcast_sink (output)	Source audio on sink headset
LE Audio Unicast	unicast_client (input)	unicast_server (output)	Client input audio on server headset
Wireless Microphone	wireless_microphone (input)	wireless_mic_dongle (output)	Mic voice on dongle headset

9.1.7 Troubleshooting

- **No audio on headset**: Verify J7 add-on board is seated correctly and headset is plugged into J14. Check A2DP/LE connection is established (monitor ITM/SWO).
- **No microphone input**: Confirm TDK PDM mic is on EVB J14/J15. For HFP, ensure ANALOG_MIC is not defined unless using ADAU1777 analog mic.
- **Broadcast sink not syncing**: Ensure source is advertising. Try broadcast code `0123456789abcdef` if password-protected.
- **Unicast client not connecting**: Verify server advertises as AMBIQ_AUDIO. Power on server before client.
- **Wireless mic not connecting**: Power on dongle (WIRELESS_MIC_DONGLE) before microphone (WIRELESS_MIC).
- **No debug output**: Define AM_DEBUG_PRINTF and connect ITM/SWO at 1 MHz via Segger J-Link.
- **A2DP/HFP not working**: Confirm cm4_btdm controller binary is flashed for Bluetooth Dual Mode.

© 2026 Ambiq Micro, Inc.
All rights reserved.

10. Ordering Information

Table 8: Ordering Information

Device Name	Orderable Part Number	Revision
Audio Add-On Board	AMAUD1	1.0

© 2026 Ambiq Micro, Inc.
All rights reserved.

© 2026 Ambiq Micro, Inc. All rights reserved.

Ambiq Micro, Inc.
6500 River Place Boulevard, Building 7,
Suite 200, Austin, TX 78730-1156

www.ambiq.com
sales@ambiq.com
https://support.ambiq.com

+1 (512) 879-2850

QS-AMAUD1-1p0
Version 1.0
October 2026